DOOR HANDLE SET / PRIVACY / SPRUNG / LINEAR

ACTION: DOOR HANDLE

KNURL: LINEAR

RANGE: DOOR HANDLES

A pair of sprung door handles made from solid metal and featuring our elegant linear knurled detailing and torx screw. With a 57x8mm rose and 41.5mm centre distances, this set works great on all internal doors and can be combined with our matching door accessories. Comes with a 60mm tubular latch and fittings.









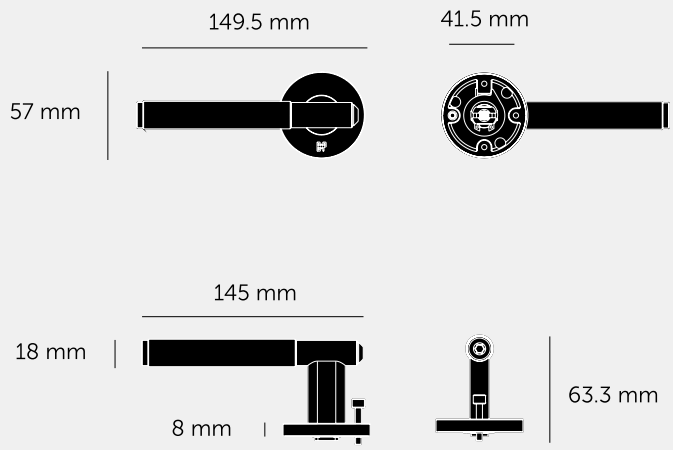

SPECIFICATIONS

A pair of solid metal privacy door handles, with an 8mm thick sprung rose.

Designed for use with ANZ (centre distance 41.5mm) specific latches.

Compatible with either tubular latches or mortise locks.

Suitable for interior doors only.

Fits doors of thicknesses minimum 35mm to maximum 45mm. For thicker doors, longer through bolts and spindle will need to be sourced.

INCLUDED

1 x pair of door lever handles
1 x 5x5x112mm square spindle
2 x 5mm to 8mm spindle adapters
1 x 60mm backset privacy tubular latch with through bolt fixings
1 x strike plate in matching finish
1 x face plate in matching finish
4 x woodscrews

PLEASE NOTE

DISCLAIMER: Always consult a trade professional when installing this product. Buster + Punch is not responsible for the usage or feasibility of installation requirements. This product is not suitable for damp or wet environments. For internal use only. Not for commercial use.

FINISH & SKU NUMBERS

sku	finish	size
ZDD-052284	brass	
ZDD-455259	smoked bronze	
ZDD-072283	steel	
ZDD-592285	welders black	

CARE INSTRUCTIONS

Wipe with damp cloth with no loose hairs, avoid using any chemicals. Please note all finishes are prone to aging.