DOOR HANDLE SET / LINEAR / SPRUNG

ACTION: DOOR HANDLE

KNURL: LINEAR

RANGE: DOOR HANDLES

A pair of sprung door handles made from solid metal and featuring our elegant linear knurled detailing and torx screw. Works great on all internal doors and can be combined with our matching door accessories.









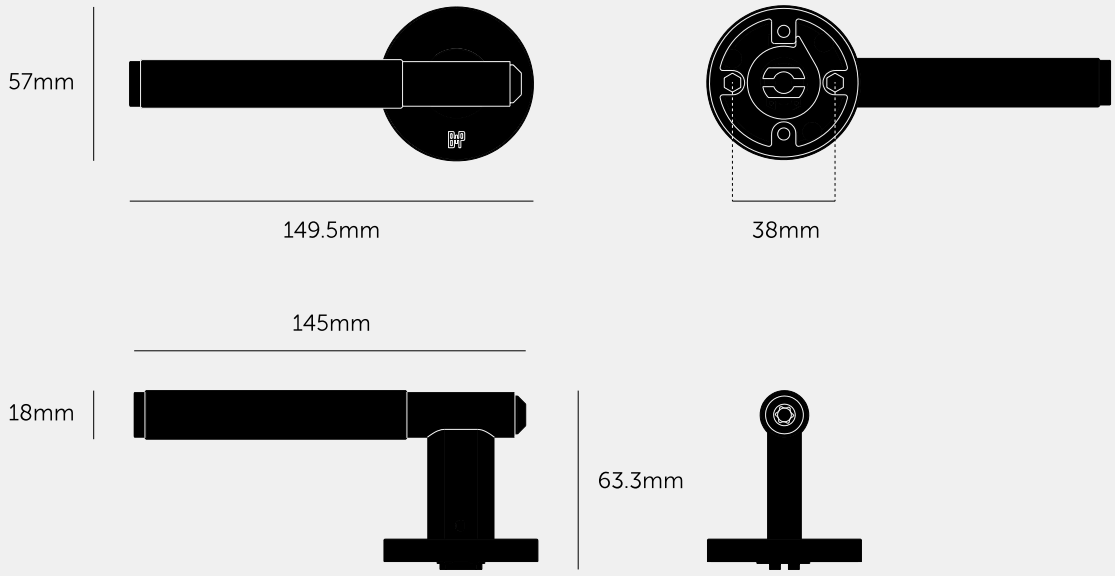

SPECIFICATIONS

A pair of solid metal door handles, with an 8mm thick sprung rose. A sprung door lever handle contains a spring in the rose which helps the handle spring back to it's original position.

Designed for use with UK (centre distance 38mm) specific latches.

Compatible with either tubular latches or mortise locks.

Our linear door handle sets use a 5mm spindle with 8mm spindle sleeves.

Suitable for interior doors only.

Fits doors thicknesses of minimum 35mm to maximum 54mm. For thicker doors, longer through bolts and a longer spindle will need to be sourced.

FINISH & SKU NUMBERS

sku	finish	size
RLH-051033	brass	
RDD-455257	smoked bronze	
RLH-071034	steel	
RLH-481032	welders black	

INCLUDED

1 x pair of sprung door handles
2 x M4 x35mm through bolts
1 x 5mm x 5mm x 112mm square spindle
2 x 5mm to 8mm spindle adapters (pre-installed)
8 x 4mm woodscrews

PLEASE NOTE

DISCLAIMER: Always consult a trade professional when installing this product. Buster + Punch is not responsible for the usage or feasibility of installation requirements. This product is not suitable for damp or wet environments. Our door handle sets have not been tested using split spindles. For internal use only. Not for commercial use.

CARE INSTRUCTIONS

Wipe with damp cloth with no loose hairs, avoid using any chemicals. Please note all finishes are prone to aging.