DOOR KNOB SET / CAST / LATCH INCLUDED

ACTION: DOOR KNOB

KNURL: CAST

RANGE: DOOR KNOBS

A pair of unsprung door knobs made from solid metal, featuring our unique rough cast knuckle. Works great on all internal doors and can be combined with our matching door accessories. Comes with a 60mm tubular latch and matching strike and face plates.









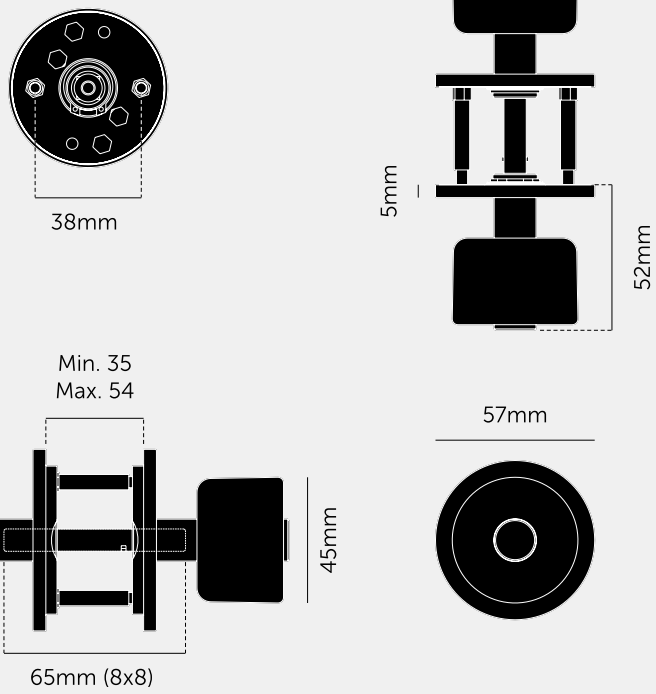

SPECIFICATIONS

A pair of unsprung solid metal door knobs, with an architectural 4mm thick rose.

The rose is designed for use with UK (centre distance 38mm), SWE (centre distance 30mm), or US/ANZ (centre distance 41.5mm or 1-5/8") specific latches.

Compatible with either tubular latches or mortise locks. Latch and strike and face plates included.

Suitable for interior doors only.

Fits doors of thickness 35mm to 54mm. For thicker doors, longer through bolts and a longer spindle will need to be sourced.

INCLUDED

Box 1:
1 x pair door knobs
2 x M4 x 35mm through bolts
1 x 8mm x 8mm x 65mm spindle

Box 2:
1 x 60mm tubular latch
1 x strike plate
1 x face plate
4 x countersunk woodscrews

FINISH & SKU NUMBERS

sku	finish	size
ZDK-054821	brass	
ZDK-454823	smoked bronze	
ZDK-074820	steel	
ZDK-484822	welders black	

PLEASE NOTE

DISCLAIMER: Always consult a trade professional when installing this product. Buster + Punch is not responsible for the usage or feasibility of installation requirements. This product is not suitable for damp or wet environments. For internal use only. Not for commercial use.

CARE INSTRUCTIONS

Clean regularly with a soft, dry cloth or duster. DO NOT use damp or wet cloth when wiping cast back plate. Use gloves while mounting the cast back plate. Use a damp cloth when cleaning glass. DO NOT use oily rags or greasy cloths when wiping the product surface.