EURO CYLINDER KEY ESCUTCHEON

ACTION: ESCUTCHEON PLATES

RANGE: ESCUTCHEON PLATES

A pair of euro cylinder plates made from solid spun metal. Works great on all internal doors and can be teamed up with our matching door handles and door knobs.









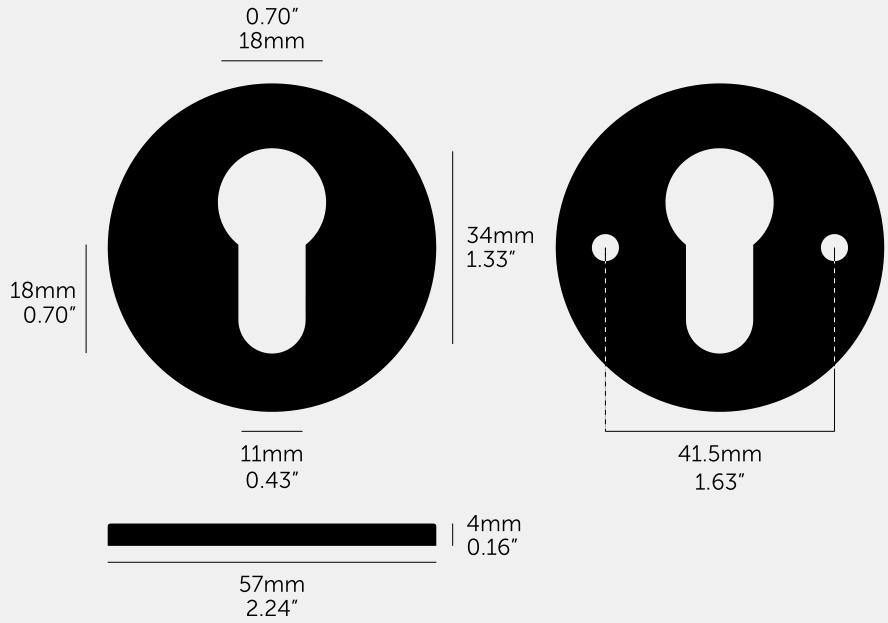

SPECIFICATIONS

An indoor key escutcheon made from solid metal. Works great on all internal doors and can be teamed up with our matching door lever handles to complete your B+P door look. Sold as a pair with fittings. Please note, keyhole insert is not included.

INCLUDED

1 x pair of key escutcheon plate and screw fixings.

FINISH & SKU NUMBERS

sku	finish	size
NES-021888	black	
NES-051887	brass	
NES-351891	gun metal	
NES-071886	steel	
NES-591890	welders black	

PLEASE NOTE

DISCLAIMER: Always consult a trade professional when installing these door knobs. Buster + Punch is not responsible for the usage or feasibility of installation requirements. This product is not suitable for damp or wet environments. Our door handles are intended for internal use only. Not for commercial use.

CARE INSTRUCTIONS

Wipe with damp cloth with no loose hairs, avoid using any chemicals. All finishes are prone to aging.