STRIKE PLATE KIT / D SHAPED / STANDARD DOOR

ACTION: STRIKE PLATES

RANGE: STRIKE PLATES

A solid metal strike plate designed to complement Buster + Punch door hardware and latch accessories, for a consistent feel every time you open the door. Works great on all internal doors.

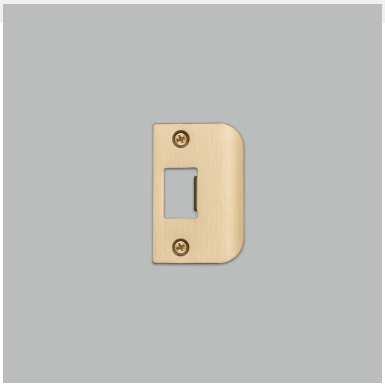







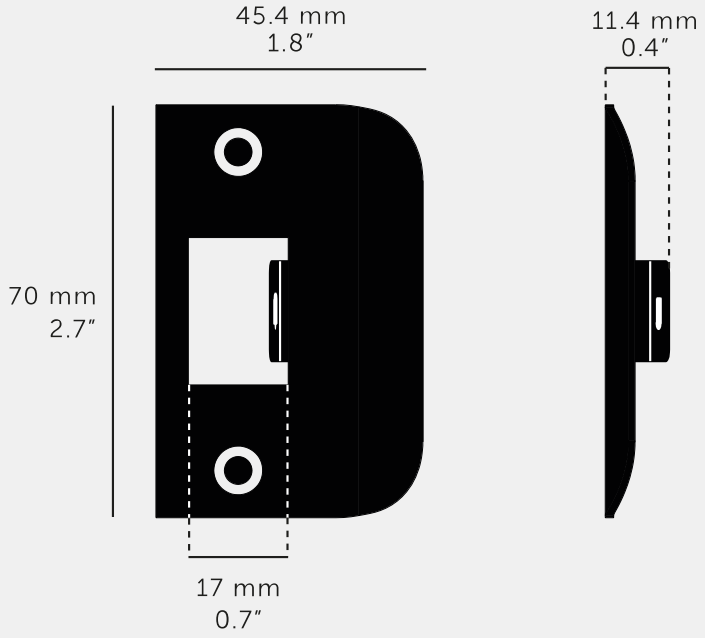

SPECIFICATIONS

A strike plate made from solid metal, with counter sunkscrew holes. Designed to complement Buster + Punch door hardware and latch accessories. Fits 2″ doors.

INCLUDED

1 x 2″ Strike Plate 2 x M4 x 62mm through bolts 4 x Woodscrews in matching finish

FINISH & SKU NUMBERS

sku	finish	size
UDS-021796	black	
UDS-051794	brass	
UDS-351798	gun metal	
UDS-071793	steel	

PLEASE NOTE

DISCLAIMER: Always consult a trade professional when installing these strike plates. Buster + Punch is not responsible for the usage or feasibility of installation requirements. This product is not suitable for damp or wet environments

CARE INSTRUCTIONS

Wipe with damp cloth with no loose hairs, avoid using any chemicals. Please note all finishes are prone to aging.