T-BAR / CROSS

ACTION: T-BAR

KNURL: CROSS

RANGE: T-BARS

A T-Bar handle made from solid metal. A solid base with diamond-cut knurled handle detailing, ensuring pleasure with every touch. Works great on cabinet doors, cupboards, kitchen units and just about anything that can open. Complete with a small disk.









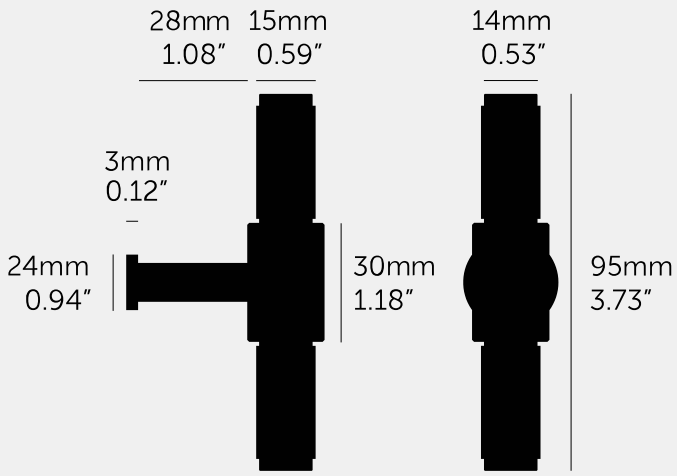

SPECIFICATIONS

Handle is fitted from behind cabinet door and can not be front face fitted.*Fits doors & draws of max 20mm.

INCLUDED

1x T-bar
1x mounting disc
1 x M5 x 30mm screw*
1 x metal washer
1x silicon washer

FINISH & SKU NUMBERS

sku	finish	size
UTB-023975	black	
UTB-054561	brass	
UTB-094588	smoked bronze	
UTB-074567	steel	
UTB-134487	warm sunset	

PLEASE NOTE

DISCLAIMER: Always consult a trade professional when installing these pull bars. Buster + Punch is not responsible for the usage or feasibility of installation requirements. This product is not suitable for damp or wet environments.

CARE INSTRUCTIONS

Wipe with damp cloth with no loose hairs, avoid using any chemicals. All finishes are prone to aging.