T-BAR / CAST

ACTION: T-BAR

KNURL: CAST

RANGE: T-BAR

A T-Bar with a rough-cast knuckle and hand polished solid metal bar. Works great on cabinet doors, cupboards, kitchen, bathroom units and just about anything that can open. Thanks to the casting process, no two knuckles are the same.









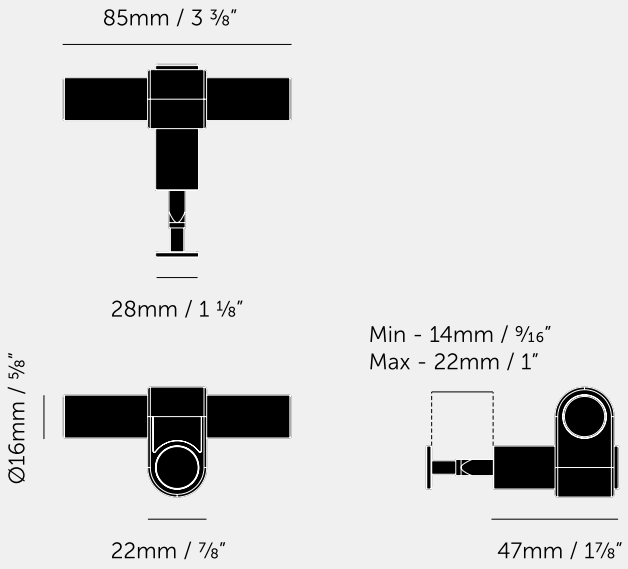

SPECIFICATIONS

A solid-metal T-bar featuring a rough-cast knuckle and hand-polished solid metal bar, with every piece refined by hand. The casting process gives each knuckle a unique character.

Designed for cabinet doors, cupboards, kitchen units, bathroom furniture and other interior applications. Durable finishes make it suitable for bathroom use.

Suitable door thicknesses:
Minimum - 14mm / 9/16 inches
Maximum - 26mm / 1 inch

Front fixed using an M5 x 35mm socket button-head screw and a 28mm mounting disc.

FINISH & SKU NUMBERS

sku	finish	size
UTB-054298	brass	
UTB-454637	smoked bronze	
UTB-074299	steel	
UTB-484300	welders black	

INCLUDED

1 x t-bar
1 x AF 4 standard allen key
1 x 28mm mounting disc
1 x spring washer
1 x flat penny washer
1 x M5x35 socket button head screw
1 x cosmetic screw

PLEASE NOTE

DISCLAIMER: Always consult a trade professional when installing this product. Buster + Punch is not responsible for the usage or feasibility of installation requirements.

CARE INSTRUCTIONS

Clean regularly with a soft, dry cloth or duster. Wash periodically using a soft cloth and mild soapy water then dry immediately with a clean, soft cloth. Rubbing or wiping should be carried out in the direction of the polish lines, not across them. DO NOT use oily rags or greasy cloths when wiping the product surface.