T-BAR / PLATE / CROSS

ACTION: T-BAR

KNURL: CROSS

RANGE: T-BARS

A T-Bar handle made from solid metal. A solid base with diamond-cut knurled handle detailing, ensuring pleasure with every touch. Works great on cabinet doors, cupboards, kitchen units and just about anything that can open. Complete with a small disk.









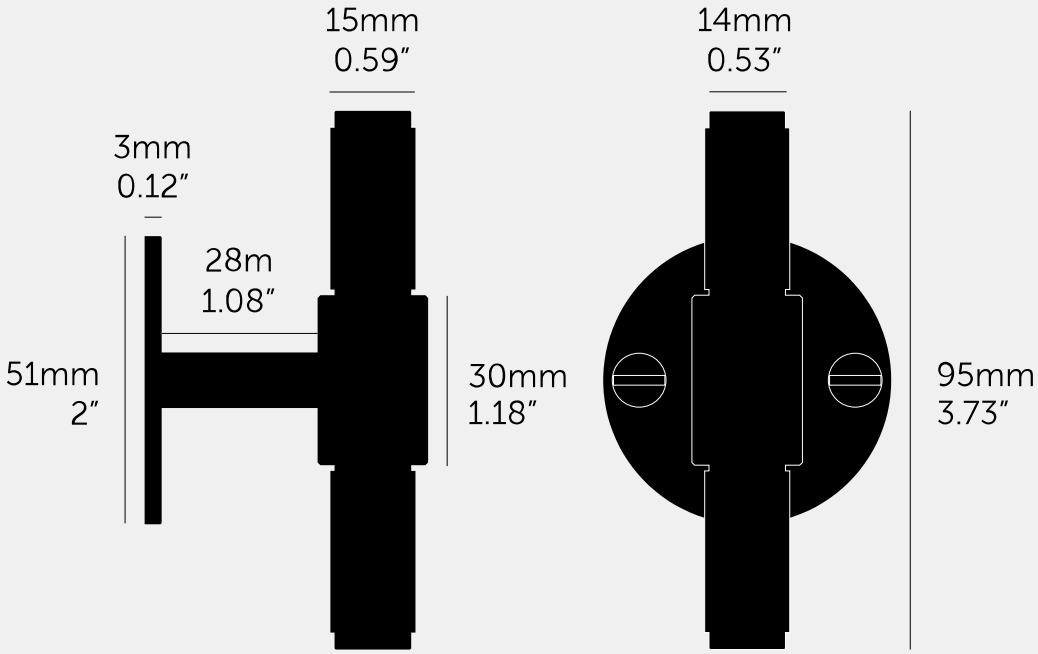

SPECIFICATIONS

Handle is fitted from behind cabinet door and can not be front face fitted.
*Fits doors & draws of max 20mm.

INCLUDED

1x T-bar
1 x M5 x 30mm screw*
1 x washer
2 x countersunk wood screws
2 x coin screws
1x back plate

FINISH & SKU NUMBERS

sku	finish	size
UTB-024020	black	
UTB-054026	brass	
UTB-454023	smoked bronze	
UTB-074590	steel	

PLEASE NOTE

DISCLAIMER: Always consult a trade professional when installing this T-Bar. Buster + Punch is not responsible for the usage or feasibility of installation requirements. This product is not suitable for damp or wet environments.

CARE INSTRUCTIONS

Wipe with damp cloth with no loose hairs, avoid using any chemicals. All finishes are prone to aging.