THUMBTURN LOCK / CAST / LATCH INCLUDED

ACTION: THUMBTURN LOCK

KNURL: CAST

RANGE: THUMBTURN LOCKS

A thumbturn lock made from solid metal, featuring our unique rough cast knuckle. Works great on all internal bathroom and toilet doors and can be combined with our matching door accessories. Comes with a 60mm deadbolt latch and matching strike and face plates.









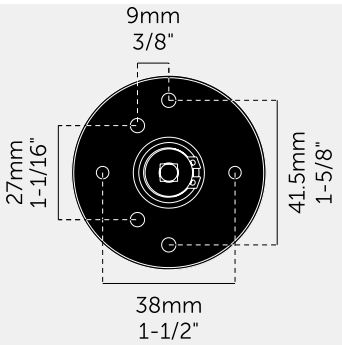

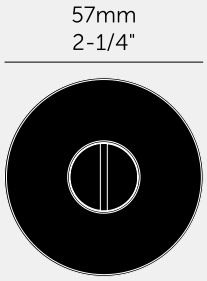

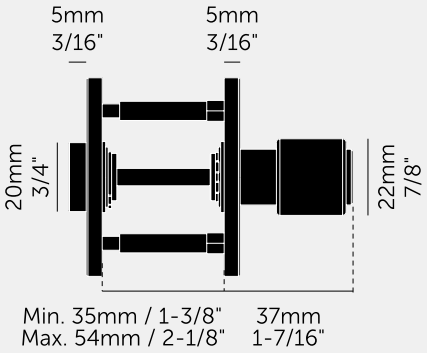

SPECIFICATIONS

A thumbturn lock, with an architectural 4mm thick rose.

Designed for installation onto locksets or deadbolt latches with 27, 38 and 41.5mm centre distances.

Compatible with either tubular deadbolt latches or mortise locks.

Fits doors thickness of minimum 35mm to maximum 54mm with supplied fixings. For thicker doors, longer through bolts and a longer spindle will need to be sourced.

Comes with a 5-8mm spindle expansion sleeve and 60mm deadbolt latch with matching strike and face plates.

INCLUDED

Box 1:
1 x thumbturn lock
2 x M4 x 35mm through bolts
1 x 5mm x 5mm x 46mm spindle
1 x 5mm x 5mm x 64mm spindle

Box 2:
1 x 60mm deadbolt latch
1 x strike plate
1 x face plate
4 x countersunk woodscrews

Box 3:
1 x 5-8mm spindle expansion sleeve

FINISH & SKU NUMBERS

sku	finish	size
ZDT-054825	brass	
ZDT-454827	smoked bronze	
ZDT-074824	steel	
ZDT-484826	welders black	

PLEASE NOTE

DISCLAIMER: Always consult a trade professional when installing this product. Buster + Punch is not responsible for the usage or feasibility of installation requirements. This product is not suitable for damp or wet environments. For internal use only. Not for commercial use.

CARE INSTRUCTIONS

Clean regularly with a soft, dry cloth or duster. DO NOT use damp or wet cloth when wiping cast back plate. Use gloves while mounting the cast back plate. Use a damp cloth when cleaning glass. DO NOT use oily rags or greasy cloths when wiping the product surface.