THUMBTURN LOCK / LINEAR

ACTION: THUMBTURN LOCK

KNURL: LINEAR

RANGE: THUMBTURN LOCKS

An indoor thumbturn made from solid metal and featuring our elegant linear knurled detailing. Works great on internal bathroom and toilet doors and can be combined with our matching door lever handles. Comes with a 5-8mm spindle expansion sleeve.









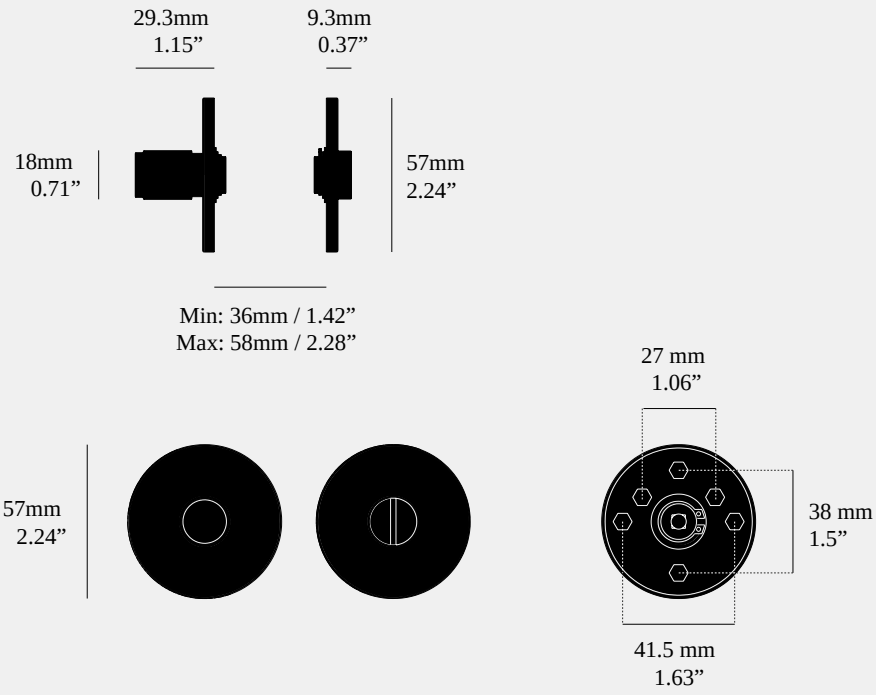

SPECIFICATIONS

A thumbturn lock, with an architectural 4mm thick rose. Designed for installation onto locksets or deadbolt latches with 27mm, 38mm or 41.5mm centre distances. Compatible with either tubular deadbolt latches or mortise locks. Fits doors of thickness: minimum 40mm to maximum 58mm (with supplied fixings*).* For thicker doors, longer through bolts and a longer spindle will need to be sourced. Comes with a 5-8mm spindle expansion sleeve.

INCLUDED

1 x thumbturn lock
1 x 5mm x 5mm square spindle

FINISH & SKU NUMBERS

sku	finish	size
ZLL-073273	brass	
ZDT-455455	smoked bronze	
ZLL-053270	steel	
ZLL-353276	welders black	

PLEASE NOTE

DISCLAIMER: Always consult a trade professional when installing these thumbturn locks. Buster + Punch is not responsible for the usage or feasibility of installation requirements. Our door handles are intended for internal use only. Not for commercial use.

CARE INSTRUCTIONS

Wipe with damp cloth with no loose hairs, avoid using any chemicals. All finishes are prone to aging.