# TOILET ROLL HOLDER / CAST

**ACTION: TOILET ROLL HOLDER**

**KNURL: CAST**

**RANGE: TOILET ROLL HOLDER**

A toilet roll holder made from solid stainless steel, featuring our signature rough-cast knuckle and hand polished solid metal bar. Thanks to the casting process, no two knuckles are the same. Suitable for bathrooms.









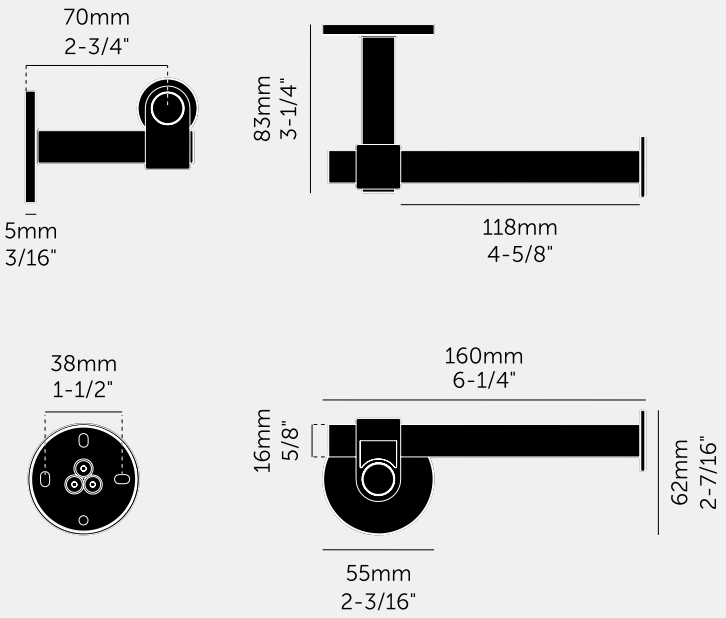


## SPECIFICATIONS

A toilet roll holder made from 304 Stainless Steel, featuring a signature rough-cast knuckle, hand-polished solid metal bar and spun metal end cap. The casting process gives each knuckle a unique character.

Designed for bathroom use and finished for durability.

Mounted on a 53mm diameter rose and front fixed using four 3.5mm x 20mm countersunk woodscrews.

## INCLUDED

1 x toilet roll holder (no shelf)
1 x 53mm inner rose cover and washer
4 x 3.5mm x 20mm countersunk woodscrews
4 x 4mm x 25mm wall plugs
1 x 5mm allen key
1 x 2.5mm allen key

## PLEASE NOTE

DISCLAIMER: Always consult a trade professional when installing this product. Buster + Punch is not responsible for the usage or feasibility of installation requirements.

## FINISH & SKU NUMBERS

| sku | finish | size |
|---|---|---|
| UTA-074317 | brass | |
| UTR-454644 | smoked bronze | |
| UTA-054316 | steel | |
| UTA-484318 | welders black | |

## CARE INSTRUCTIONS

Clean regularly with a soft, dry cloth or duster. Wash periodically using a soft cloth and mild soapy water then dry immediately with a clean, soft cloth. Rubbing or wiping should be carried out in the direction of the polish lines, not across them. DO NOT use oily rags or greasy cloths when wiping the product surface.