Round Sliding Cavity Privacy Lock

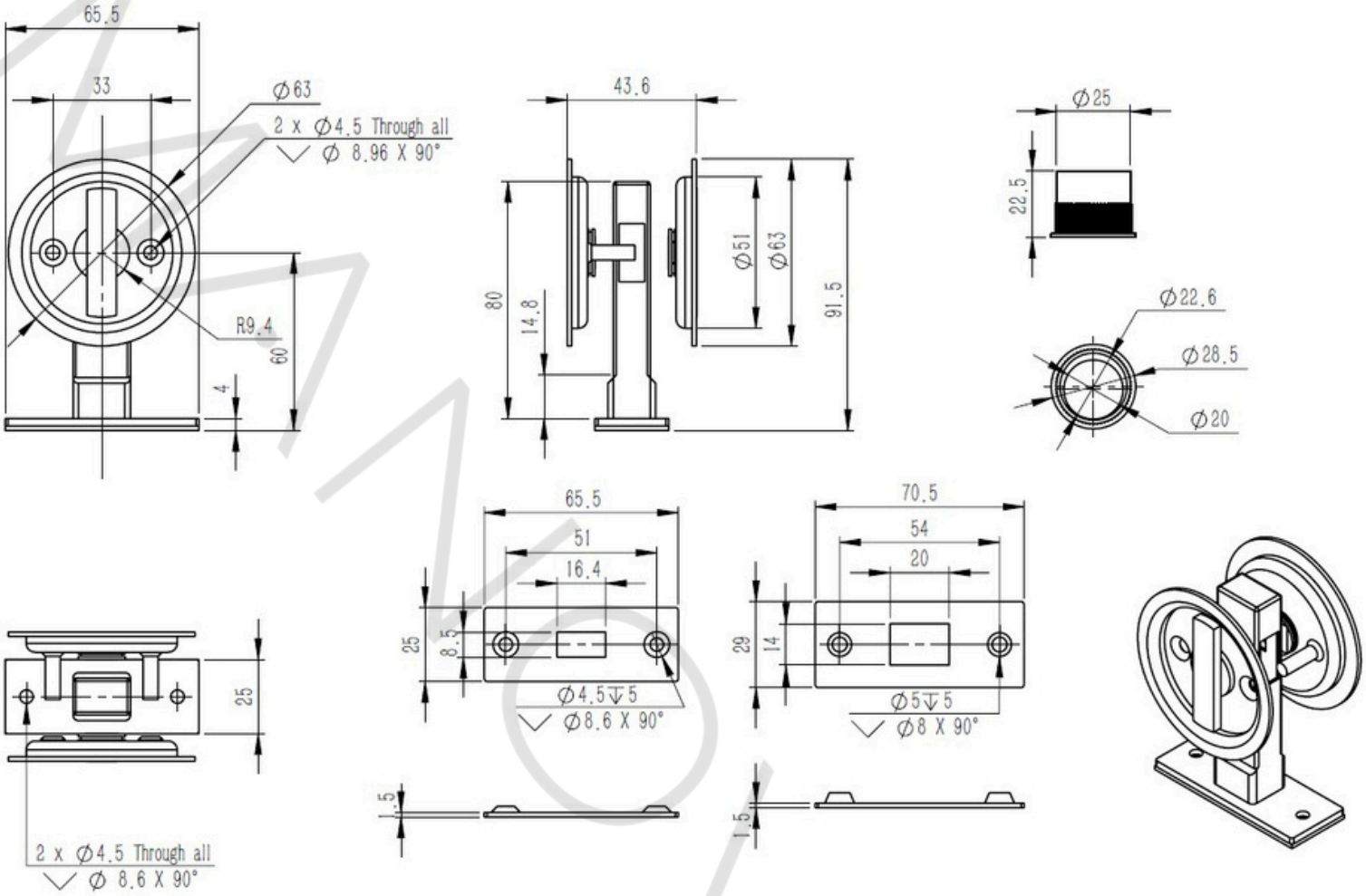

FINISHES	
Brushed Copper	Matt Black
Satin Brass	Gunmetal
Brushed Nickel	Aged Brass
Sienna Bronze	

SKU	CAV2xx
Function	Sliding Privacy Lock
Backset	60mm
Rose (Plate) Size	63mm (Suits 54mm Hole)
Material	304 Grade Stainless Steel

Maintenance: We recommend regular cleaning with a microfibre cloth and warm soapy water followed by drying the product thoroughly. Please avoid using any harsh chemicals or abrasive cloths when cleaning.