Sliding Door Round Flush Pull 65mm

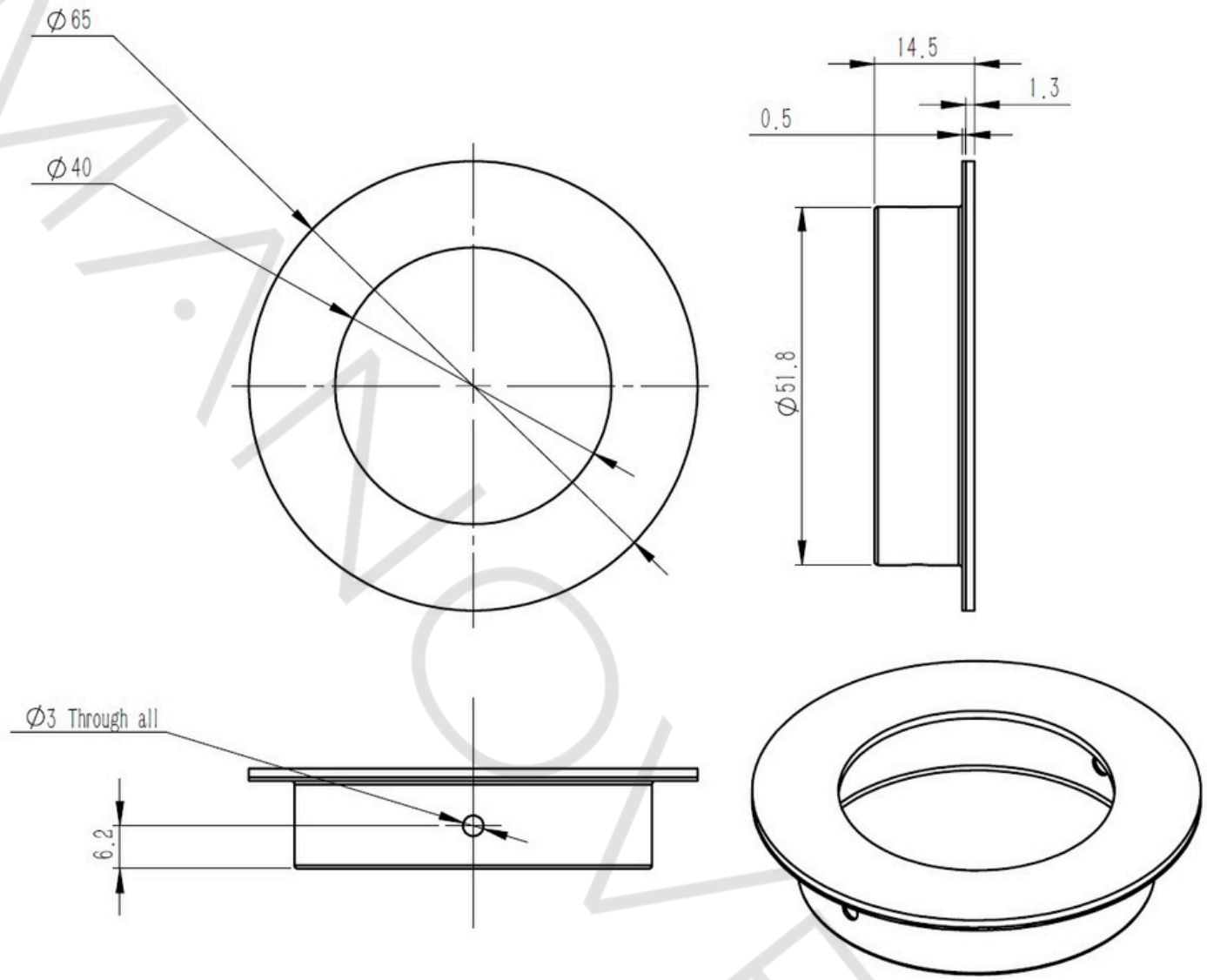

FINISHES	
Brushed Copper	Matt Black
Satin Brass	Gunmetal
Brushed Nickel	Aged Brass
Sienna Bronze	

SKU	FP65xx
Fixings	Concealed (2 X Timber Screws Included)
Material	304 Grade Stainless Steel

Maintenance: We recommend regular cleaning with a microfibre cloth and warm soapy water followed by drying the product thoroughly. Please avoid using any harsh chemicals or abrasive cloths when cleaning.