MANOVELLA

Product Specification Sheet

Lift Off Right Hand Hinge (Pair) 100mm x 75mm

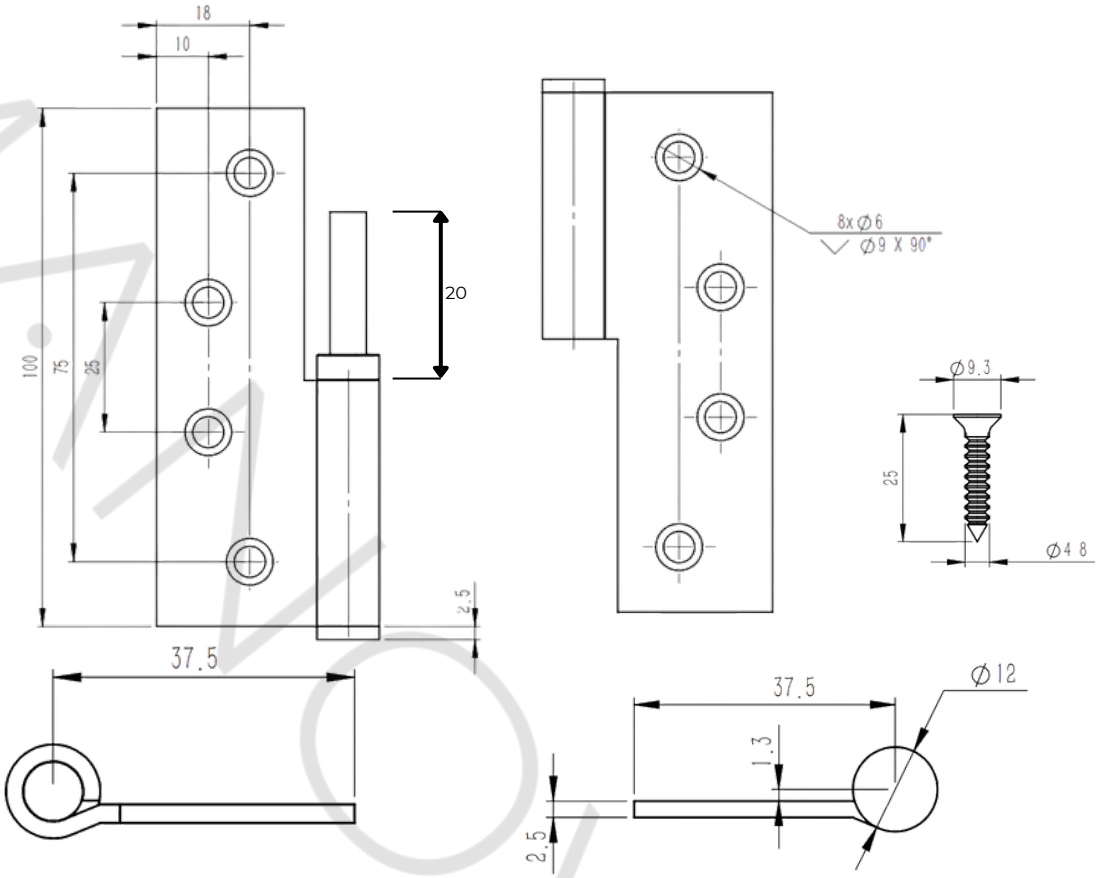

RIGHT HAND (RH)

Handing

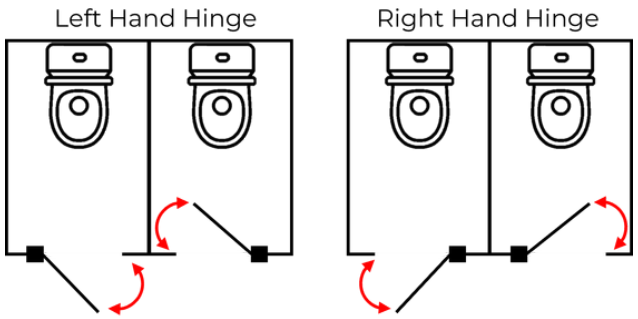

SKU	**HLOR10075xx**
Contents	**2 x Hinges + Timber Fixings**
Fixings	**16 x 25mm Timber Screws in matching finish**
Material	**304 Stainless Steel**

FINISHES

- Brushed Copper
- Matt Black
- Satin Brass
- Gunmetal
- Brushed Nickel
- Aged Brass
- Sienna Bronze

Maintenance: We recommend regular cleaning with a microfibre cloth and warm soapy water followed by drying the product thoroughly. Please avoid using any harsh chemicals or abrasive cloths when cleaning.