Half Moon Cabinet Pull - Iris

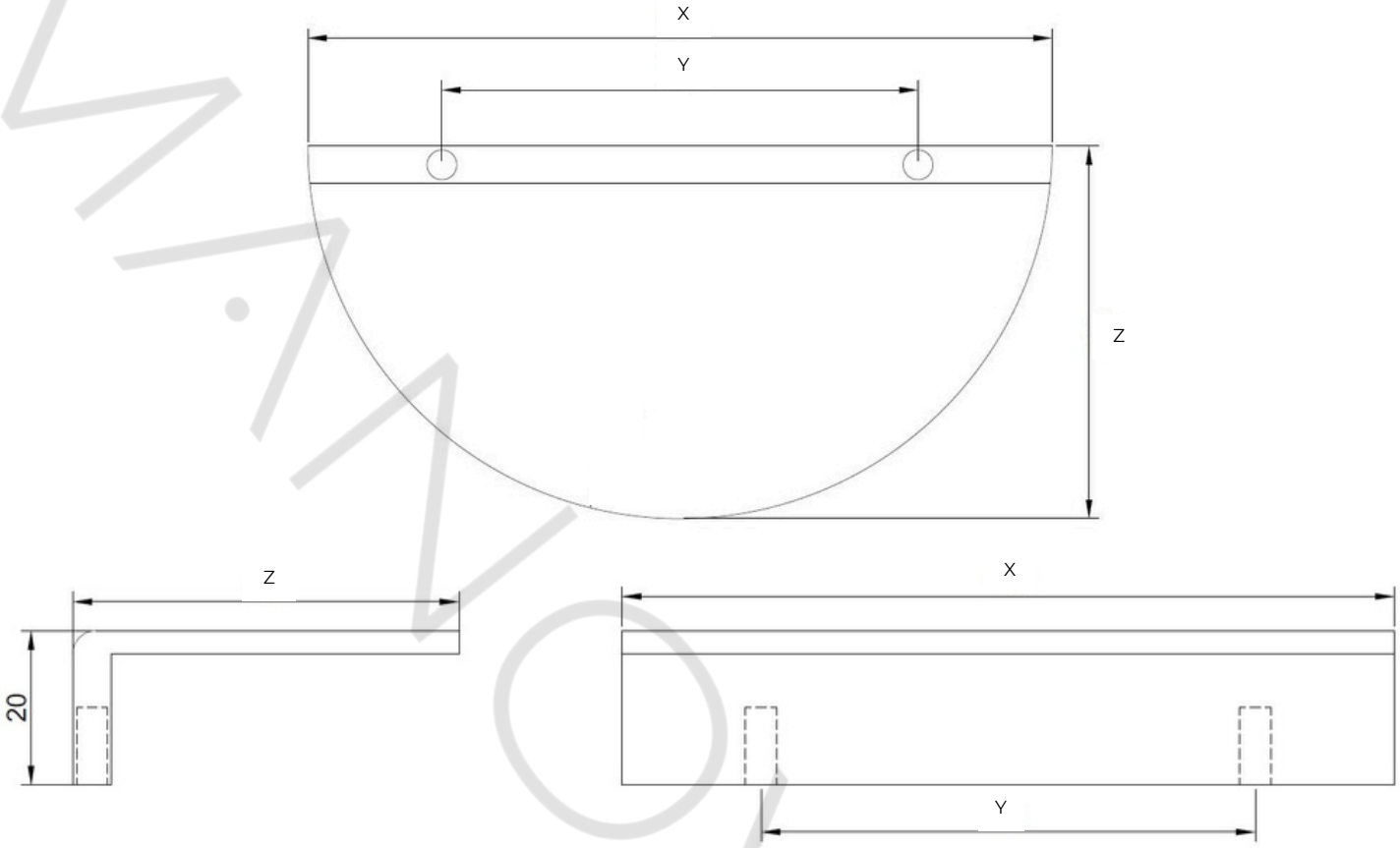

Overall (X)	SKU	C2C (Y)	Length (Z)
100mm	CABIRI100xx	64mm	50mm
150mm	CABIRI150xx	96mm	75mm

FINISHES

- Aged Brass
- Brushed Brass
- Brushed Brass (PVD)
- Brushed Copper (PVD)
- Brushed Nickel
- Gunmetal
- Matt Black
- Sienna Bronze (PVD)
- White

PRODUCT	IRIS Half Moon Cabinet Pull
Fixings	2 X M4 Cabinet Screw 25mm (Included)
Material	Solid Brass

Maintenance: We recommend regular cleaning with a microfibre cloth and warm soapy water followed by drying the product thoroughly. As brass is a soft material, Please avoid using any harsh chemicals or abrasive cloths when cleaning.