Rebate Kit to suit Tubular Latch & Bolt

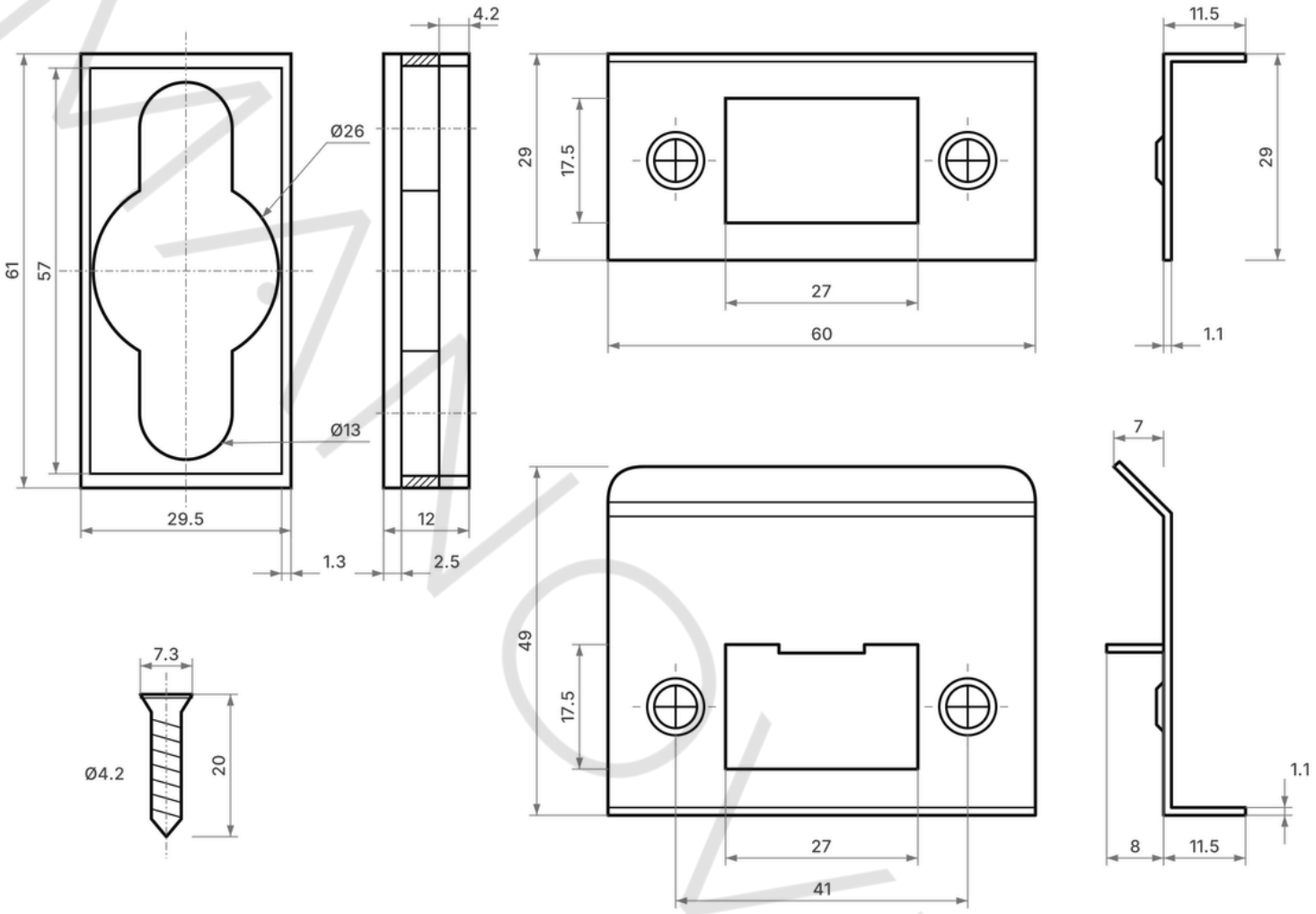

FINISHES	
Brushed Copper	Matt Black
Satin Brass	Gunmetal
Brushed Nickel	Aged Brass
Sienna Bronze	

SKU	REBTUBxx
Material	304 Stainless Steel

Maintenance: We recommend regular cleaning with a microfibre cloth and warm soapy water followed by drying the product thoroughly. Please avoid using any harsh chemicals or abrasive cloths when cleaning.